Soft Down Stays (Short Arm) (JP_SDS_C100_TV)

EUROFIT®

Lapcon

Torque Calculation:
Torque = Door Height x Door Weight /20
per piece: 5~12kg. mm
per pair: 10~24kg. mm

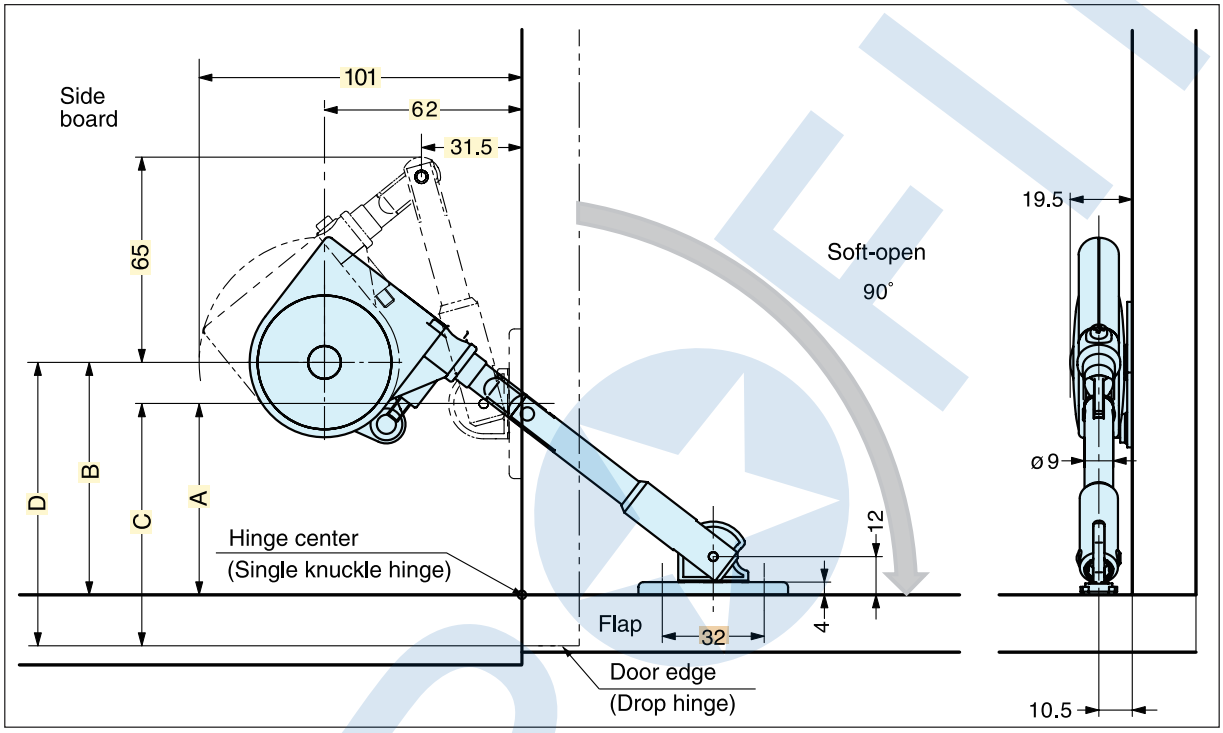

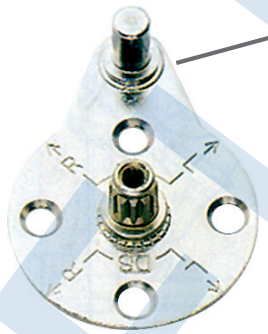

mounting plate
SDS-A

for Right side board

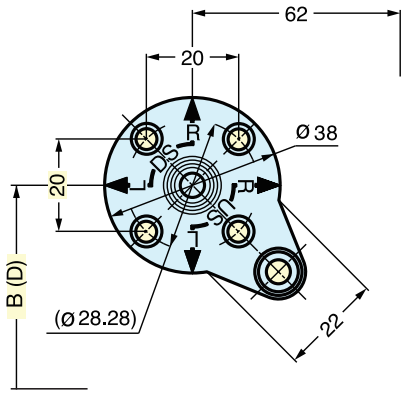

Hinge Type	A	B	C	D
single knuckle hinge	60	73	-	-
drop hinge	-	-	49+s	62+s